REAR DOOR

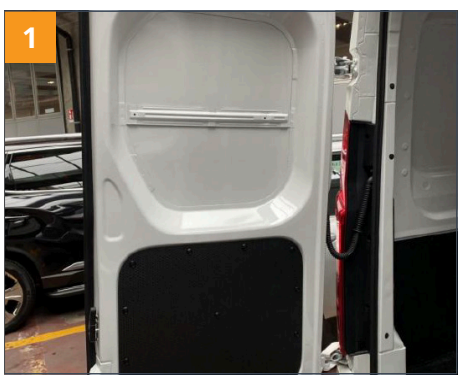

Remove the panels from both rear doors. Remove the plastic cover to release the film.

Apply the drilling template. The longitudinal axis of the lock body is positioned 7 cm from the upper edge of the lower plastic trim on the rear door. Align the vertical axis (dashed line) with the edge of the rear door. Mark the 9 mm holes.*

For easier fastening of the lock-body mounting plate from the inside, it is advisable to loosen the standard lock. Loosen the fastening bolts and move the lock housing without removing it.

REAR DOOR

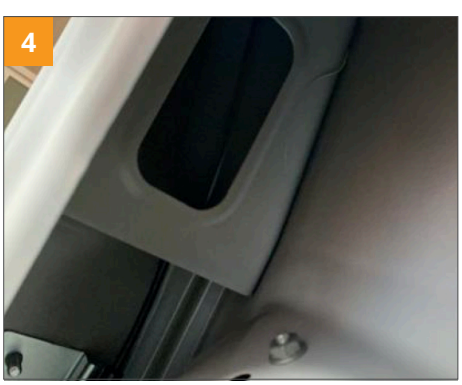

At the rear door the lock plate must be inserted from below because there is a bracket at the top. *Continue with the steps described in the general installation procedure.*

SLIDING DOOR

Remove the panels from the sliding door and the side panel. Apply the drilling template. The longitudinal axis of the lock body is positioned 26 cm from the housing of the door guide. Mark the 9 mm holes.*

Continue with the steps described in the general installation procedure.

*** Take particular care when drilling near the edge. Before drilling, check that the head of the M8 pin will fit within the edge. When drilling the hole for routing the emergency release cable, drill through the outer sheet metal only so that the cable can be inserted into the door.**

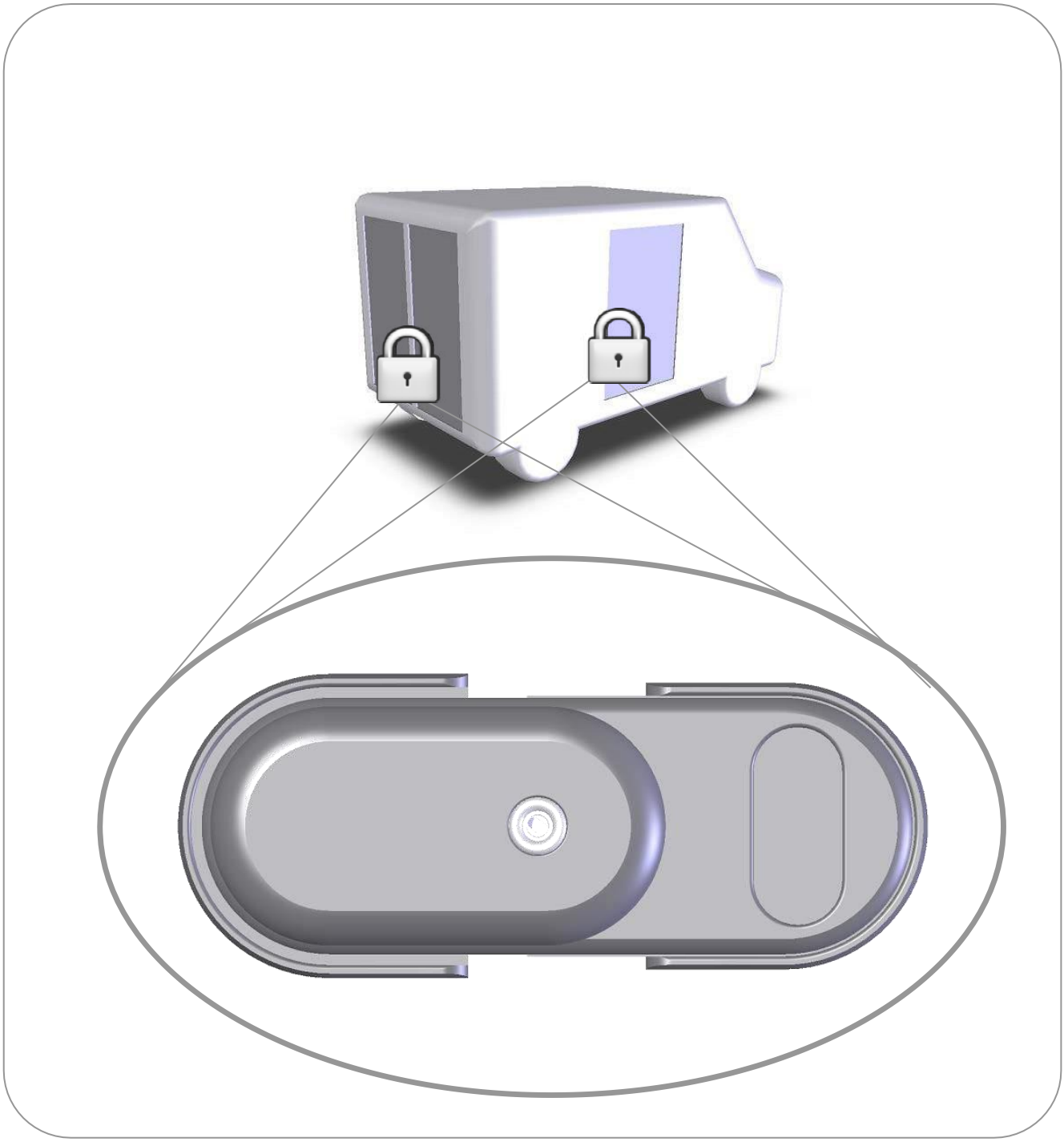

GATELOCK MEDIUM

VAN LOCK FOR COMMERCIAL VEHICLES

Series 4 Category Medium Mod. B
Sold Secure Gold certified (SS102:2019)
Certificate available on request

General installation manual

IMPORTANT INFORMATION

Introduction

Dear Customer,
Thank you for choosing the GATELOCK MEDIUM, a highly reliable van lock suitable for light commercial vehicles and vans. Read the instructions for using and installing the GATELOCK MEDIUM carefully so that you are familiar with its installation, use and maintenance and can avoid errors while carrying out the work.

Proper use of the lock

The van lock and its components are suitable for environments with the following characteristics:

- maximum relative humidity 95%
- Ambient temperature -20°C to +60°C

The accessories are designed for installation on the lock's original components. Using non-approved parts on the lock voids liability for product defects.

The operation of the lock and the accessories supplied by BLOCK SHAFT has been verified. If third-party components are used, contact the manufacturer if you have any doubts about their suitability.

Ensure correct installation of the van lock

- Provide the relevant information and the necessary instructions to the persons concerned.
- Have the lock installed by qualified personnel, according to the installation instructions.

Ensure correct use of the van lock

- The lock is installed as specified
- The lock is not used incorrectly
- The lock is maintained periodically in accordance with the maintenance instructions
- The lock is not damaged by external influences
- Maintenance and repairs are carried out by qualified personnel

The supplier/manufacturer accepts no responsibility for personal injury or property damage resulting from improper use or operation contrary to the product's intended purpose.

Improper use of the van lock

Incorrect use of the van lock occurs:

- If the guidelines for the intended use are not followed.
- Where the proper functioning is hindered by foreign and/or non-compliant objects.
- When the locking system or strike plate has been tampered with, as indicated by changes to or damage to the lock body, its operation or its function.
- When locking components are installed and subsequently treated in a way that prevents them from operating correctly, for example by painting moving parts such as the lock body.
- When excessive loads are transferred to the locking system by applying more than normal hand force to the key in the lock cylinder or by holding the key at an abnormal angle.
- When tools, levers, power tools or similar objects are used to operate or force the locking system.
- When the lock is locked/unlocked with unsuitable objects.
- Where sizes other than those mentioned in the manual are used.
- When other van locks are installed in addition to the Gatelock.
- When the lock is opened with a key other than its corresponding coded key.

The safety instructions relate to the installation and use of the lock.

- The manufacturer accepts no liability for damage resulting from use contrary to the instructions.
- For safety reasons, the lock is designed to be combined with original BLOCK SHAFT components. The use of non-BLOCK SHAFT components affects the properties of the lock.
- After installation, the lock must operate easily and smoothly.
- Installing and repairing the lock requires specialist knowledge and may therefore be carried out only by qualified personnel.
- For safety reasons, changes or temporary repairs are not permitted.
- Only original spare parts may be used when replacing components.
- With regard to the safety features of the lock, the manufacturer is responsible, within the framework of the applicable regulations, only if maintenance, operation and modifications have been carried out by the manufacturer himself or by his representative, in accordance with the manufacturer's instructions.
- BLOCK SHAFT disclaims all liability for damage of any kind caused by incorrect operation, modification or maintenance.

OPERATION (REAR DOORS AND SLIDING DOORS)

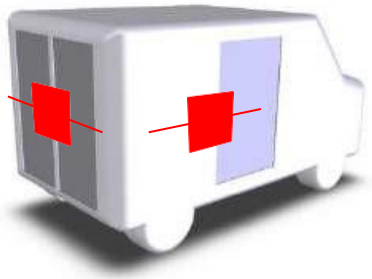

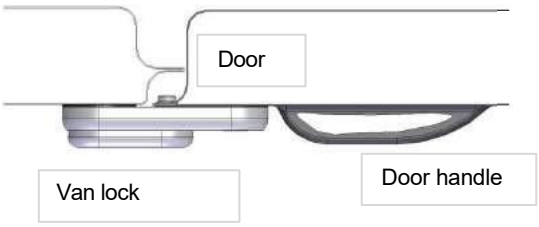

1. Lock closed, door closed.

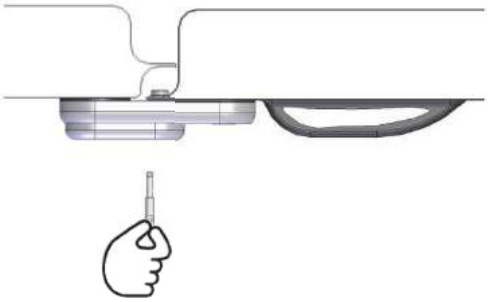

2. Lock closed, door closed.
Insert the key into the lock cylinder.

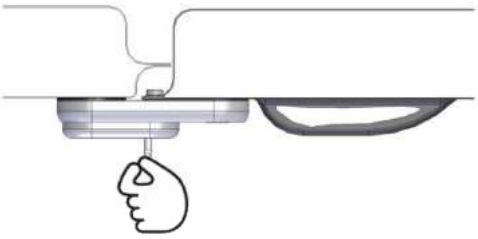

3. Lock open, door closed. Turn the key approx. 180°.

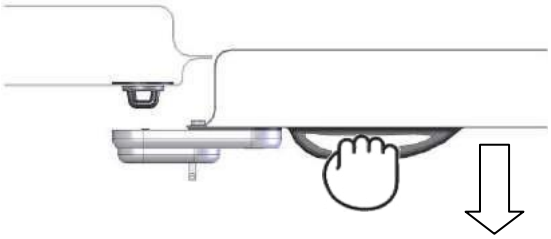

4. Lock open, door open.

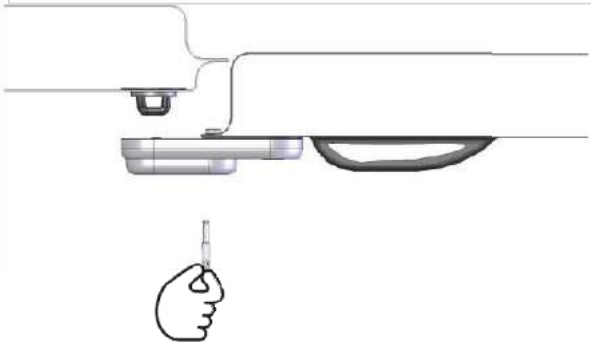

5. Lock locked, door open. Turn the key in opposite direction and remove the key.

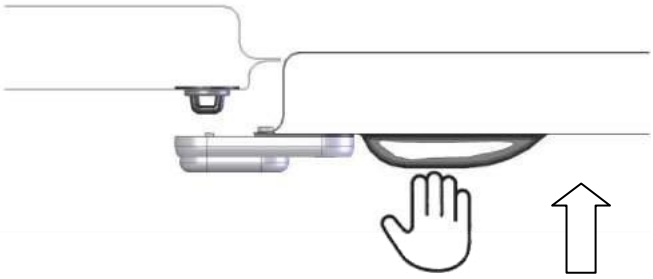

6. Lock and door closed.
Close the door; the lock closes automatically.

INSTALLATION

GATELOCK MEDIUM is a van lock for commercial vehicles. It is installed directly on the doors and requires holes to be drilled through the sheet metal, as shown below. The lock can be fitted to the rear doors and/or the sliding doors (right and/or left). It remains permanently mounted on the doors.

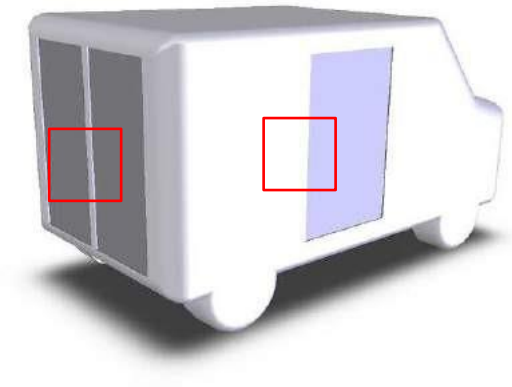

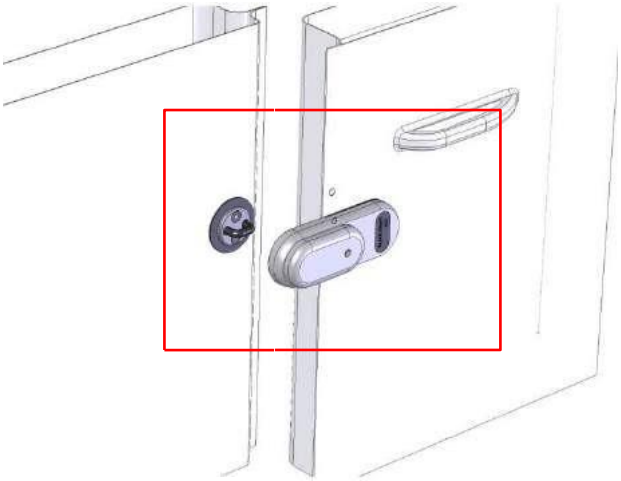

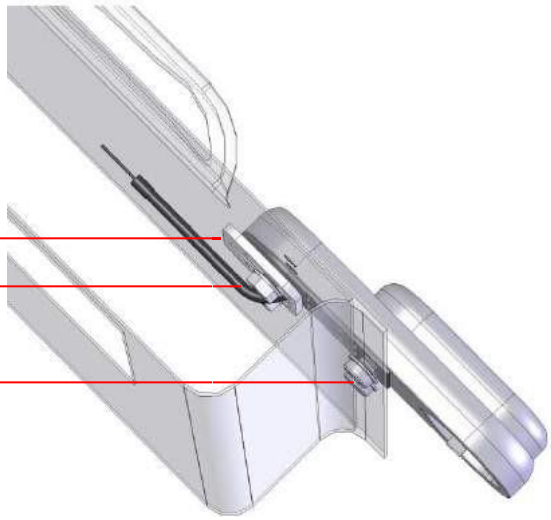

Lock body

The lock is attached to the door

Over the edge of the door using two M8 bolts screwed into the housing and two M8 nuts on the two studs projecting from the housing, with a special back plate on the inside of the door.

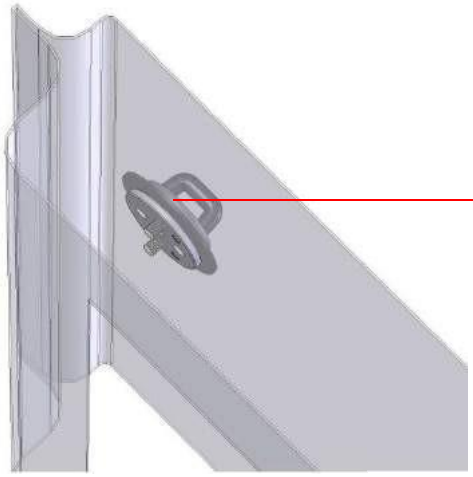

Strike plate

The strike plate is secured with two M6 bolts screwed into a special round back plate on the inside of the rear door/sliding door.

TECHNICAL FEATURES

Locking system with strike plate and locking hook

The lock uses a specially shaped C-shaped locking hook as its locking element. When the lock closes, this hook encloses the strike plate attached to the fixed part of the door. This design offers several advantages.

OPEN **CLOSED**

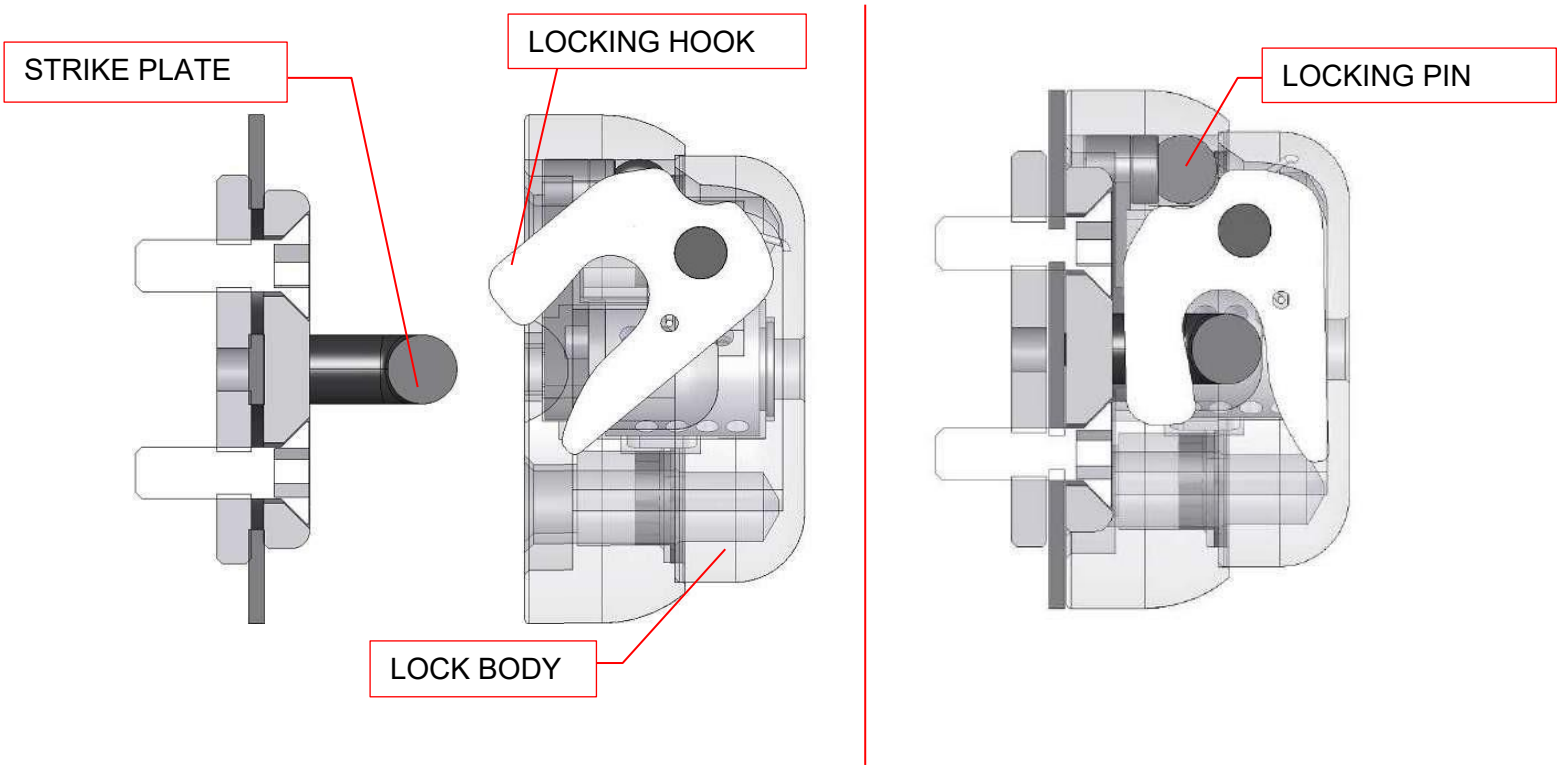

The first advantage is that this locking method is considerably more effective at resisting the high forces generated during an attempted break-in with mechanical tools such as a hammer, chisel or crowbar. When the lock is closed, the strike plate is completely concealed and inaccessible.

The second advantage is that it ensures reliable operation of both the doors and the lock. Even if the doors become misaligned for any reason, this locking method continues to operate correctly.

Finally, this locking design is more robust because friction between its components is low. The locking hook applies less force to the strike plate, reducing deformation and damage when the doors are subjected to load.

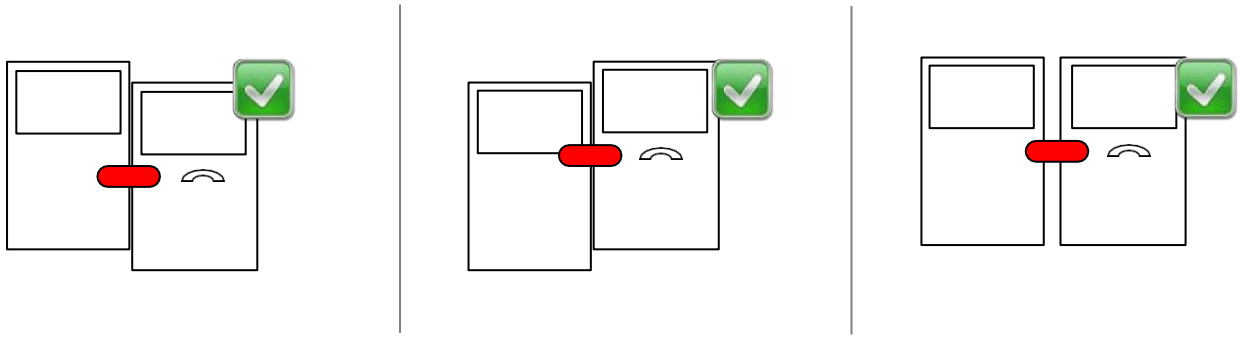

Finish

The lock has a completely rounded, enclosed shape, preventing common burglary tools such as pliers, wrenches, hammers and chisels from gripping and breaking it free. The lock can also be anchored to the door's sheet metal with back plates on the inside, preventing the metal from tearing when force is applied.

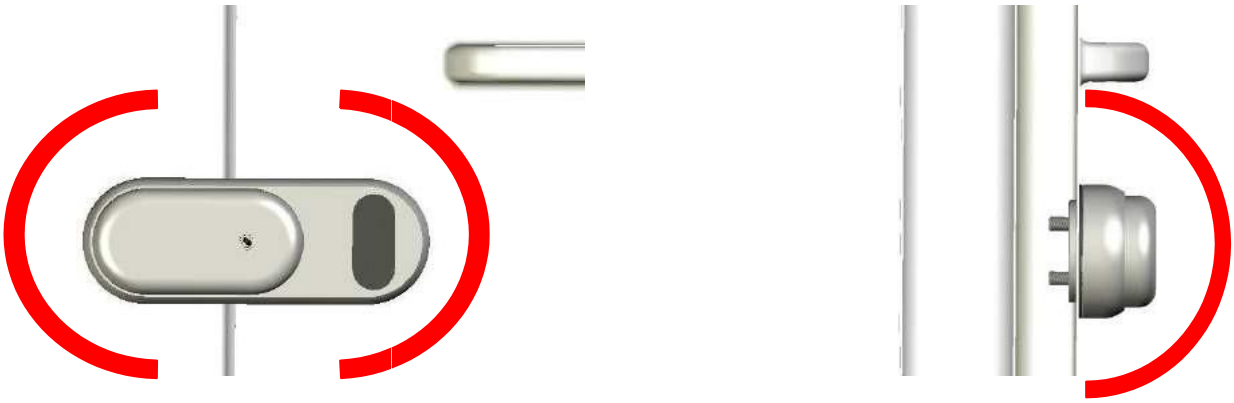

The robust locking hook and 8 mm-thick strike plate enable the unit to withstand prolonged attacks with heavier burglary tools, such as a 5 kg hammer and a crowbar.
Every locking component is difficult to reach and therefore resistant to tampering. In particular, the locking hook that blocks rotation is fully integrated into the lock body and protected externally by several millimeters of nitrocarburised steel. The lock body consists of two solid-steel components machined using CNC equipment.

A prolonged attack can eventually cause a locking component to fail. A lock is a deterrent rather than a definitive solution to theft; it must resist tampering for as long as possible while increasing the likelihood that an attempted break-in will be detected.

In all cases, to maximise the effectiveness of the lock, it is advisable to keep the vehicle's original lock operational and locked. Using both locks—the vehicle's original lock and the GATELOCK MEDIUM—provides maximum effectiveness.

The installation set contains the following components:

1. 1 x COMPLETE LOCK WITH SHEATHED CABLE
2. 1 x STRIKE PLATE
3. 3 x KEYS + 1 x OWNERSHIP CARD WITH PERSONAL CODE
4. 1 x BACK PLATE FOR THE STRIKE PLATE
5. 1 x BACK PLATE FOR THE LOCK BODY
6. 2 x M8 LOW-HEAD SOCKET SCREWS WITH WASHERS
7. 2 x M6 COUNTERSUNK-HEAD SCREWS
8. 2 x M8 BOLTS
9. 2 x M8 NUTS
10. 1 x PLASTIC CONNECTING PLATE
11. 2 x PLASTIC SHIM PLATES FOR THE LOCK BODY
12. 1 x PLASTIC COVER FOR THE ANTI-THEFT BOLT SEAT
13. 1 x EMERGENCY RELEASE KIT WITH SECURITY SEAL
14. 1 x SELF-ADHESIVE RESIN LOGO STICKER (ON REQUEST ONLY)
15. 1 x DRILLING TEMPLATE & INSTALLATION INSTRUCTIONS

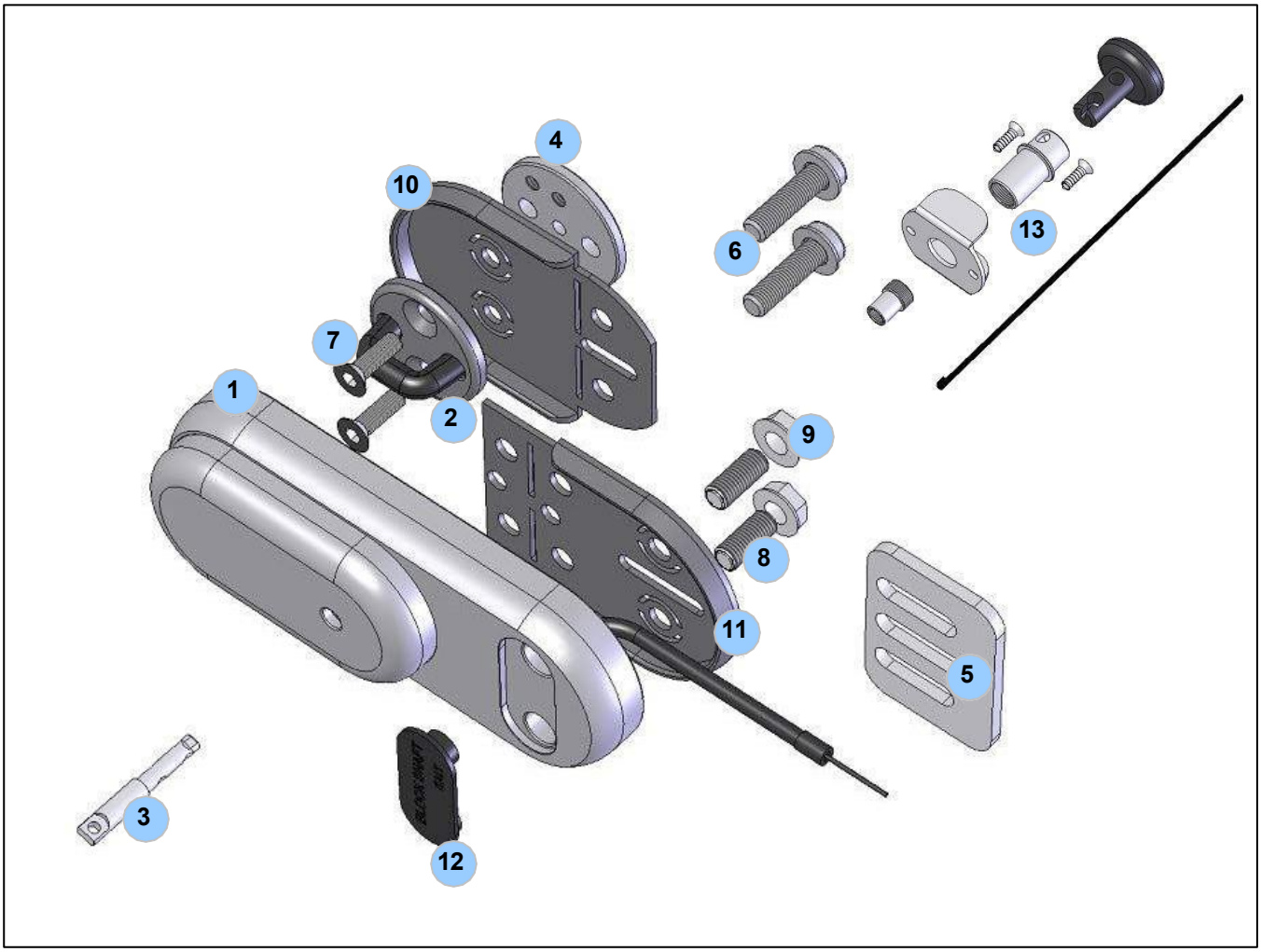

GENERAL INSTALLATION PROCEDURE

Installation consists of a series of straightforward steps that differ only in certain details between vehicles. In particular, the mounting height of the lock body varies by vehicle.

STEP 1

First check that the doors are correctly aligned. If their edges are not perfectly aligned (fig. 1 and fig. 3), adjust them using the door striker (fig. 2) and/or the hinges. Once the doors meet correctly, determine the correct position of the strike plate. On older doors, replace or reinforce the hinges if necessary.

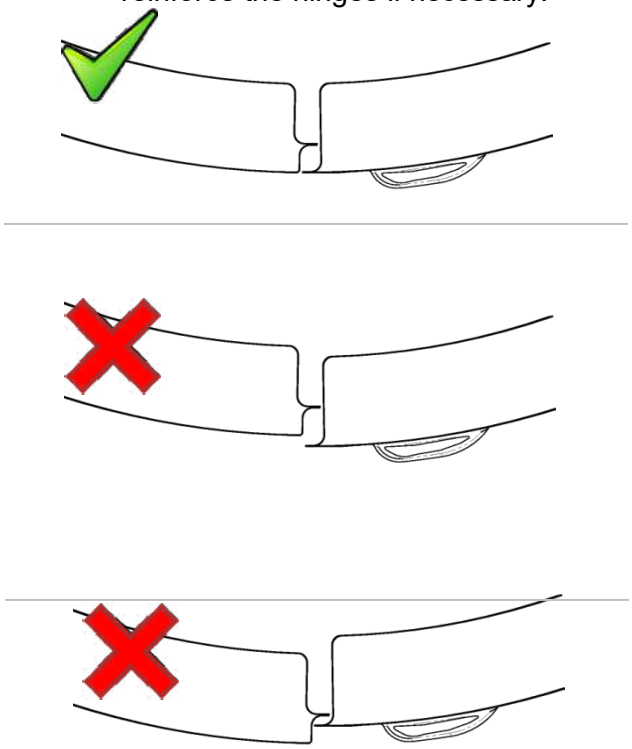

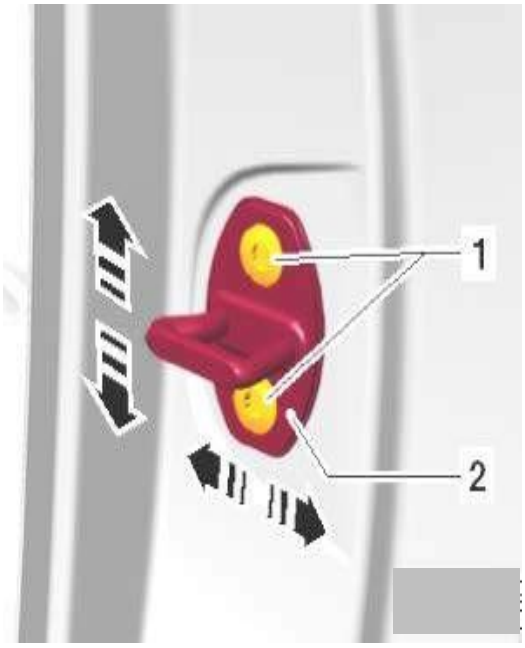

Fig.1

Fig.2

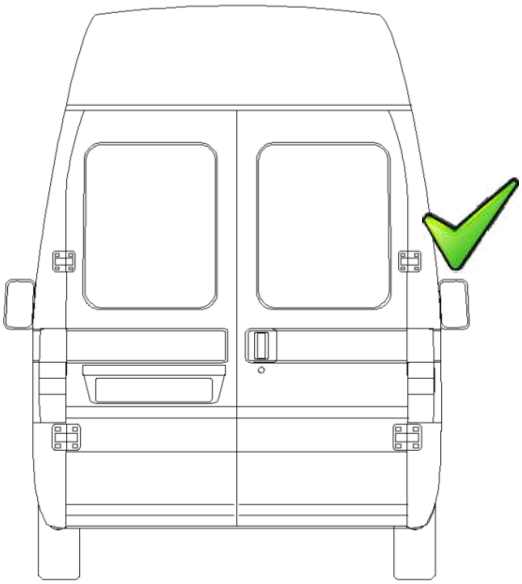

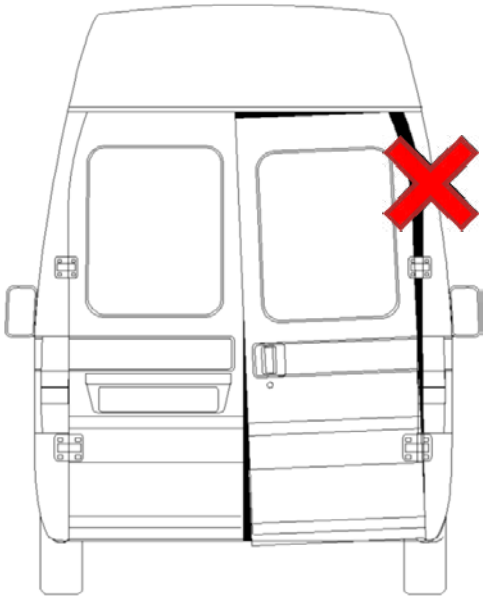

Fig.3

STEP 2

Assess one or more possible positions for the lock. The following general criteria apply:

- The position of the lock body relative to the lower edge of the door (H) must be as close as possible to the centre of the door (see fig. 4). Ideally, the distance from the lower edge of the door to the lock (H) is equal to the distance from the lock to the upper edge.

- The position of the first two holes of 9 mm is approximately 10 ± 2 mm from the vertical edge of the door that opens (see fig. 5). This is a very strong part of the door. The specified tolerance is necessary to ensure that the cylinder heads of the M8 bolts are placed within the edge and never outside.

- The position of the latch and the lock body must allow the back plates and nuts to be fitted correctly and subsequently tightened with tools. Obstructing sheet-metal sections may need to be bent or trimmed.
- Avoid ribs and unusual folds in the outer door skin by positioning the lock body on a suitable flat, even surface.

Following the above criteria determines the final and correct position of the lock.

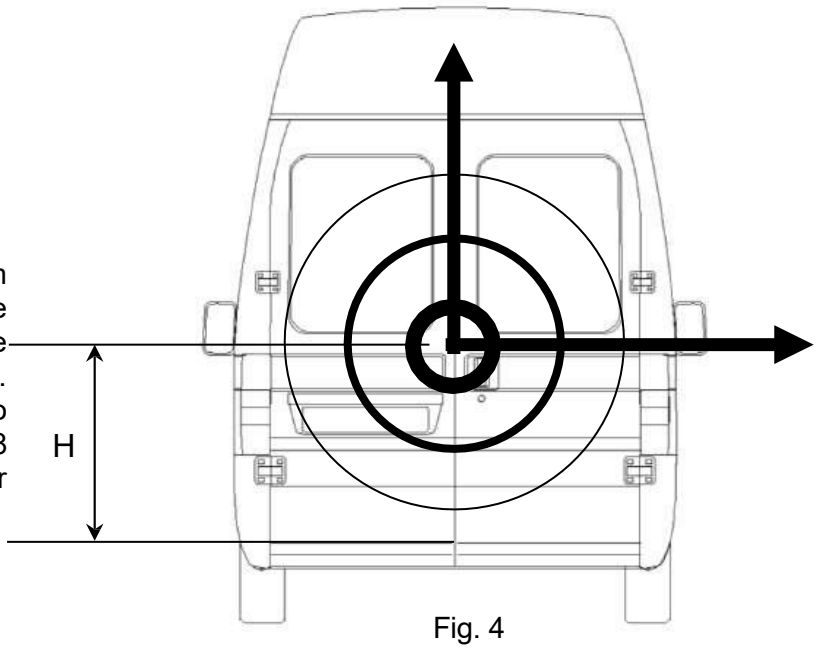

Fig. 4

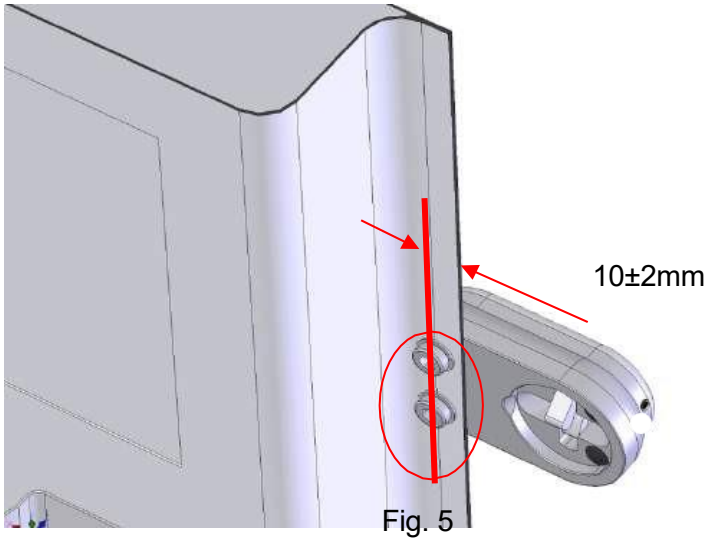

Fig. 5

STEP 3

Remove the inner door trim before installation. Select suitable lock positions that are clear of ribs, profiles, the vehicle's original lock, rods and levers. It may be necessary to remove the vehicle's original lock or reshape parts of the sheet metal.

The lock is secured as follows (fig. 6):

- 2 x M8 bolts through the door edge and into the lock body
- 2 x M8 nuts projecting from the lock body, inserted through slots in the back plate and secured from the inside with two M8 bolts
- 2 x M6 bolts securing the strike plate directly to the threaded back plate

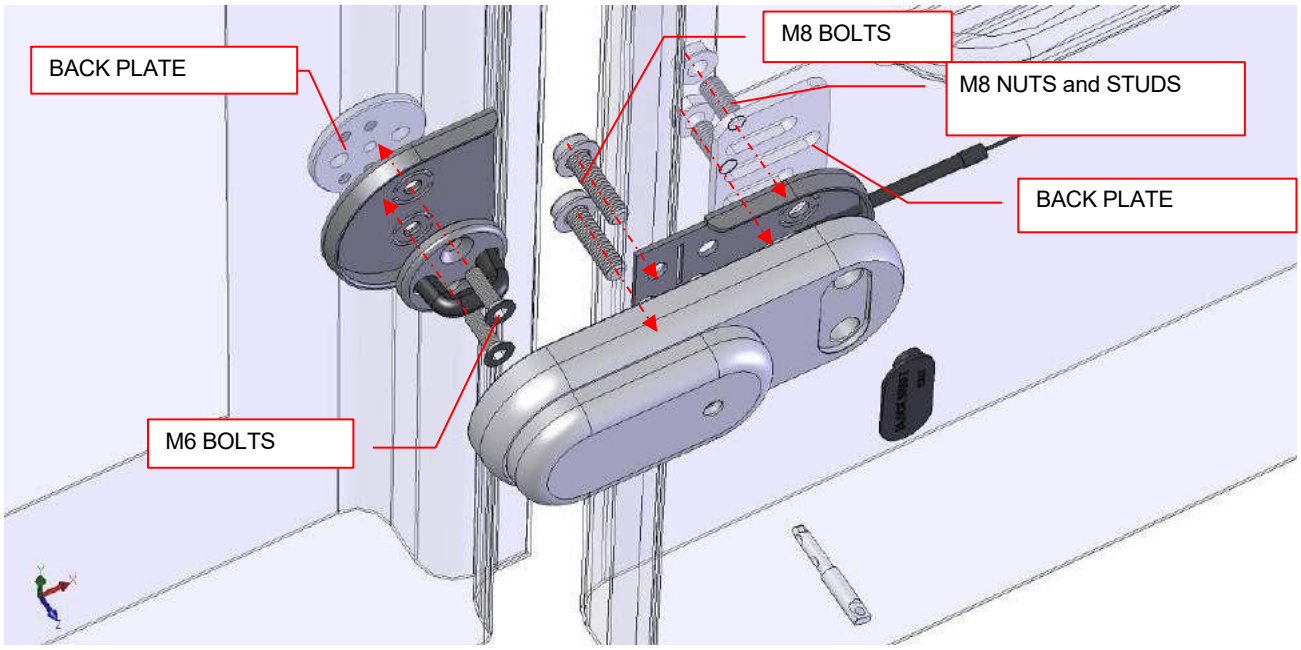

Fig.6

Position the drilling template on the door (fig. 7), using the indicated axes as reference points.

BEFORE DRILLING, CHECK CAREFULLY THAT THERE ARE NO OBSTRUCTING PARTS ON THE INSIDE AND THAT THE BACK PLATES CAN BE FITTED.

Drill holes:

- 4 holes of 9 mm diameter for fixing the lock body
- 2 holes of 9 mm diameter for fixing the strike plate
- 1 hole of 9 mm diameter for emergency release cable passage

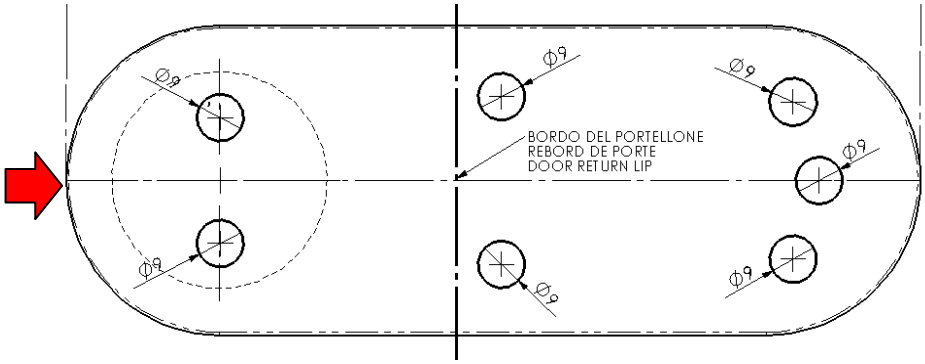

Fig. 7

Position the drilling template on the vehicle so that horizontal line H is correctly aligned (mark it with a marker if necessary), and align the vertical line with the joint of the right-hand door. In other cases, position the vertical line approximately 10 mm from the edge of the door. Mark the holes with an awl by making a small indentation in the sheet metal so that the drill bit remains centred and does not slip (fig. 8).

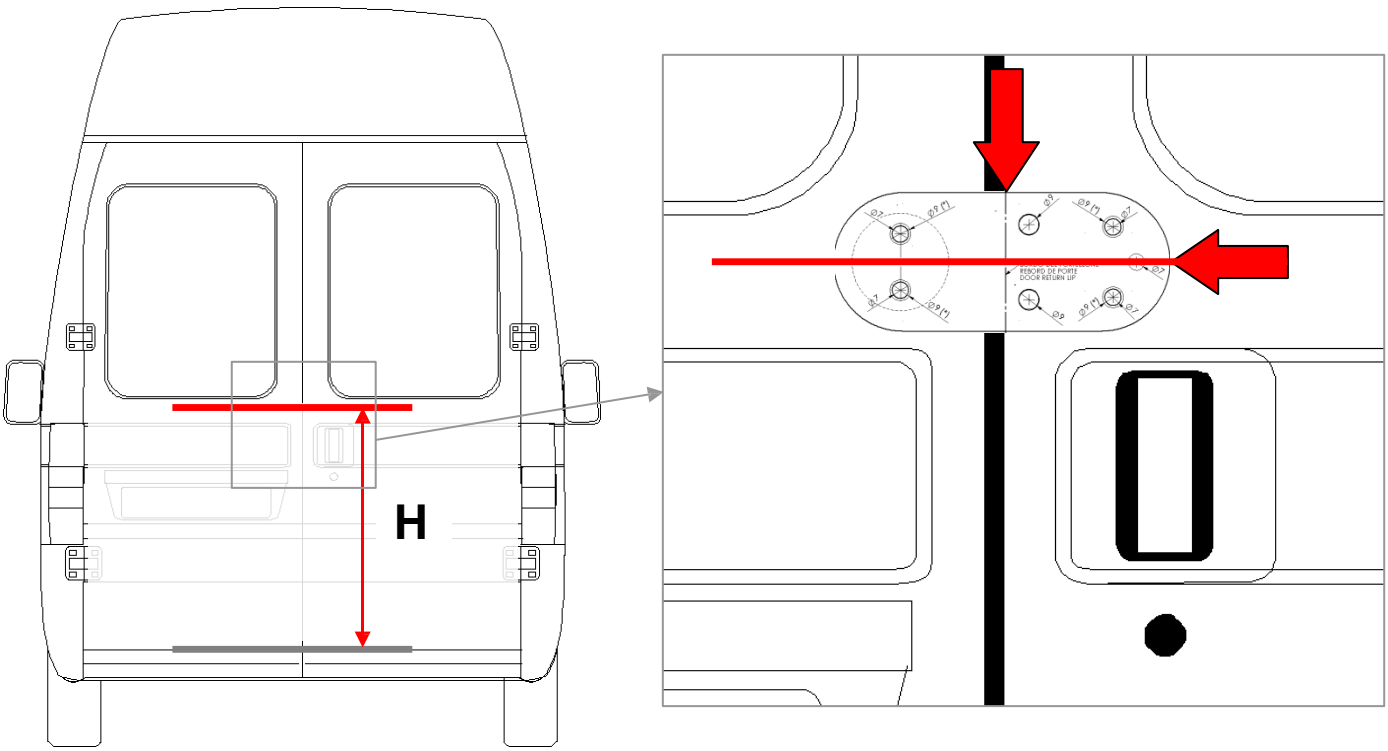

Fig.8

STEP 4

Before drilling, remove or reposition the vehicle's original lock, the door handle and any other door-mounted components that obstruct the drilling locations. This prevents damage to internal components and facilitates subsequent installation of the lock and back plates.

The lock body is normally secured by drilling the outer edge of the door for the two low-head M8 bolts.

Before drilling, check that the head of each M8 bolt will remain within the door edge (see fig. 5).
If the sheet metal around the holes is not perfectly flat and the M8 bolt heads cannot sit flush, flatten it carefully using pliers and a piece of plastic (fig. 9).

To avoid bending or damaging the outer sheet metal, you may instead place a flat plastic plate against it (fig. 10), with aluminium or plastic spacers between the plate and the sheet metal. Tighten the bolts gradually to draw the sheet metal flat so that the bolts can be installed correctly (fig. 11).

Then cover the edges of the holes with protective lacquer.

Fig.09

Fig.10

Fig.11

If there is also an inner double panel with excessive clearance around the holes, use one of the solutions below to prevent dangerous deformation of the sheet metal and a visible dent (fig. 12).

If another location without a double inner panel cannot be selected, or if the inner sheet metal cannot be moved aside, use one of the following solutions: (A) reinforcing sleeves (not supplied) fitted internally between the two panels (fig. 13), or (B) spacer sleeves (not supplied) fitted externally in counterbores made in the sheet metal.

The counterbore must not exceed the maximum dimensions of the lock body, so that the lock body completely conceals it (fig. 14). Neither type of sleeve may be longer than the space between the two panels, as this could cause damage.

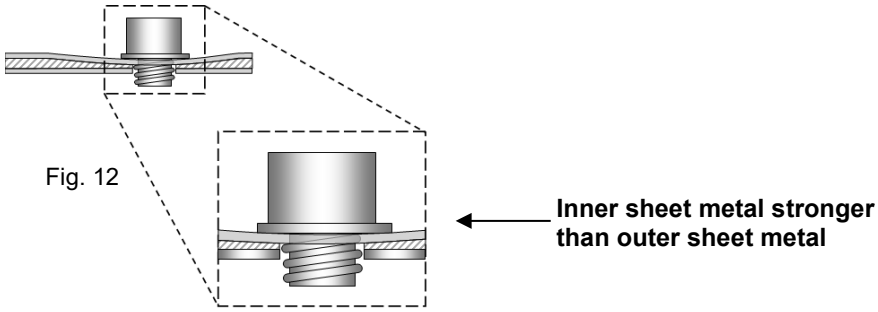

Fig. 12

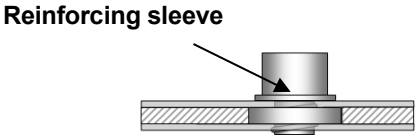

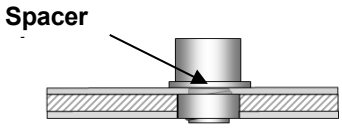

Fig.13 Fig.14

STEP 5

Place the back plates on the inside of the door. If a back plate unavoidably interferes with internal panels, profiles or ribs, modify it as necessary by cutting, shortening, twisting or bending it.

At this stage, a second person inside the vehicle can hold the back plate in position while the other person tightens the M6 bolts (fig. 15).

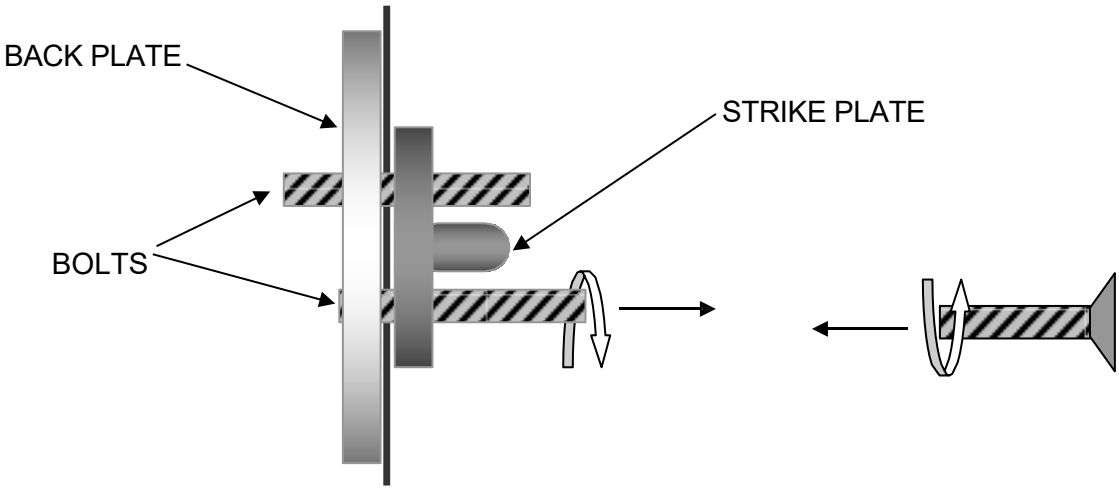

Fig.15

STEP 6

Place the plastic protective plate between the strike plate and the sheet metal (fig. 16). Secure the strike plate with two countersunk M6 bolts. The back plate provides two alternative threaded positions.

Choose the position most suitable for the vehicle. If neither position is suitable, rotate the back plate by 90°. Secure the two countersunk M6 bolts with two nuts on the inside of the sheet metal. In an emergency, the lock can be opened from inside by removing these two nuts.

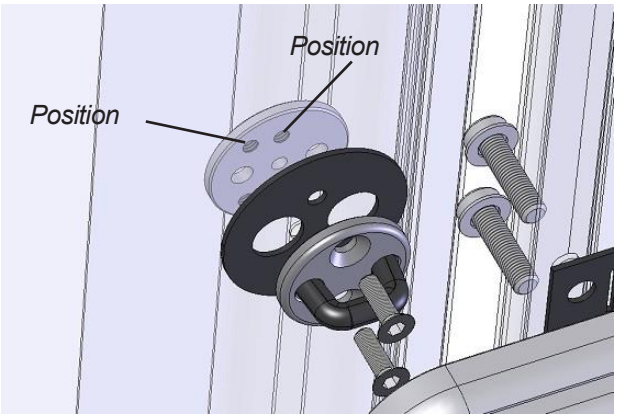

Fig. 16

The strike plate can be installed in two different configurations. If neither position is suitable, rotate the back plate by 90° and secure the two M6 bolts with nuts on the inside of the door (nuts not included). If the lock is damaged, it can then be opened from inside by removing these nuts.

STEP 7

In the same way, fasten the lock body to the edge of the door using the two M8 socket-head screws and the two M8 studs on the lock body, together with the two M8 nuts fitted directly from the inside. Place the back plate between them; its slots allow the two studs to pass through (fig. 17).

This installation may require the vehicle's original lock to be removed or simply moved out of its mounting position.

If the door sheet metal is thick or double-skinned and strong enough to resist tearing, the back plate may be omitted. The back plate may also be used as a spacer behind the inner sheet metal.

If interference is unavoidable, modify the back plate as necessary by cutting or shortening it. Always place the special plastic protective plate between the lock body and the sheet metal.

Do not fully tighten the M8 nuts yet; the lock body still needs to be centered. At the same time, insert the emergency release cable housing through the hole in the door and into the vehicle interior. Ensure that the emergency release cable is not pinched and can move freely.

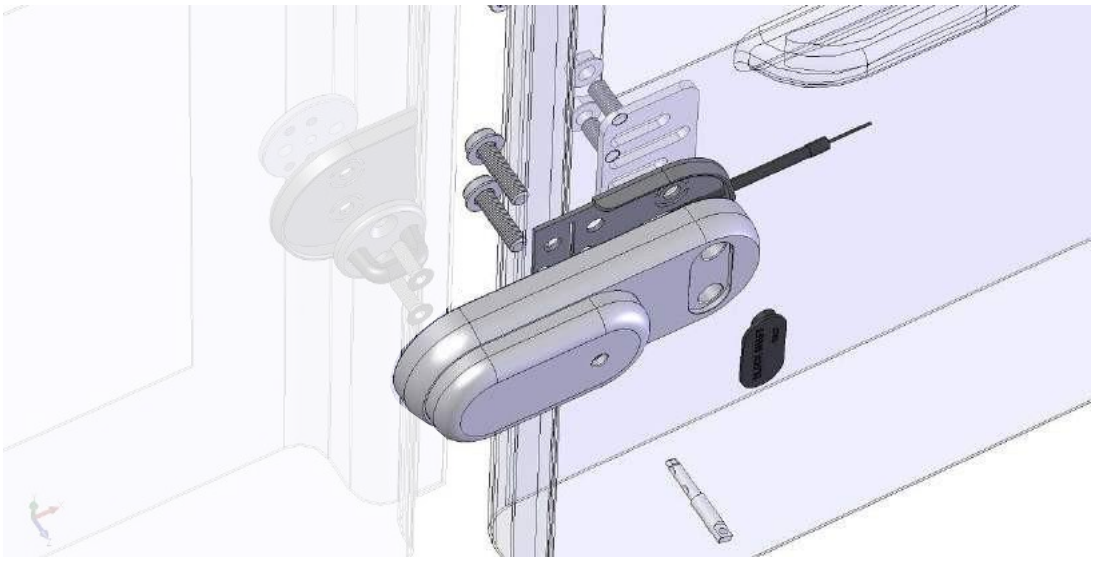

Fig. 17

Use the second plastic spacer plate if necessary to compensate for irregularities or misalignment. Trim it to suit. This allows the lock to follow the door contour and align precisely with the strike plate (fig. 18).

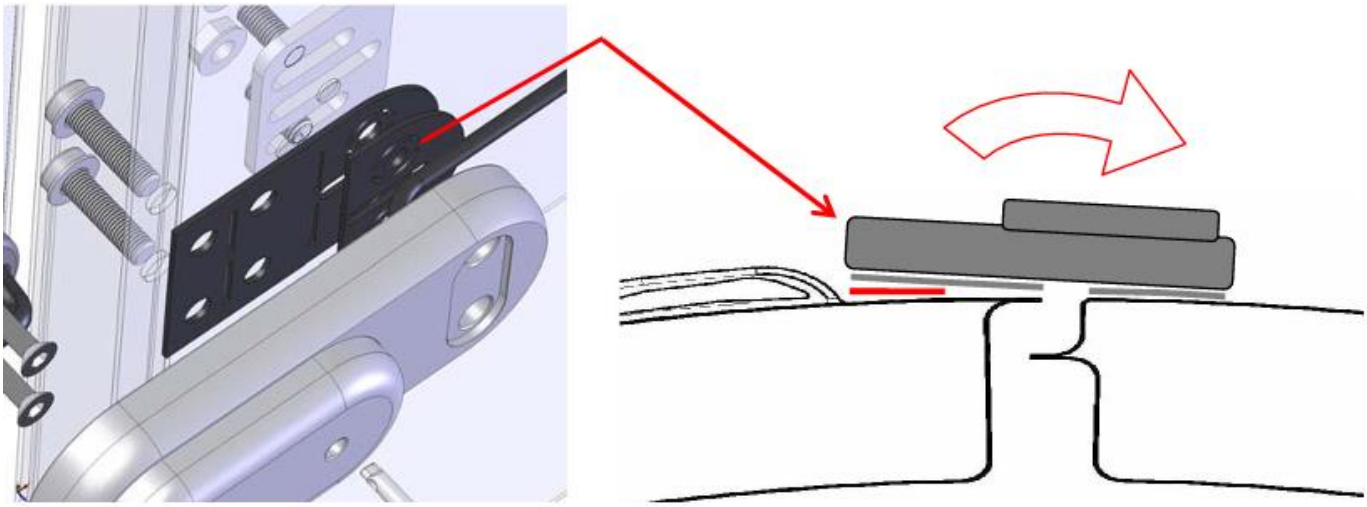

Fig.18

STEP 8

Minor alignment corrections can be made with a rubber mallet. Because the lock connects two doors, it must retain a small amount of movement to maintain correct alignment. Make this adjustment with the lock open, the key inserted and turned through 180°.

Make sure that the locking hook is open; otherwise the strike plate will hit it. If the hook is closed when the doors are shut, the impact can force the lock backwards and severely damage both the locking hook and the strike plate (fig. 19).

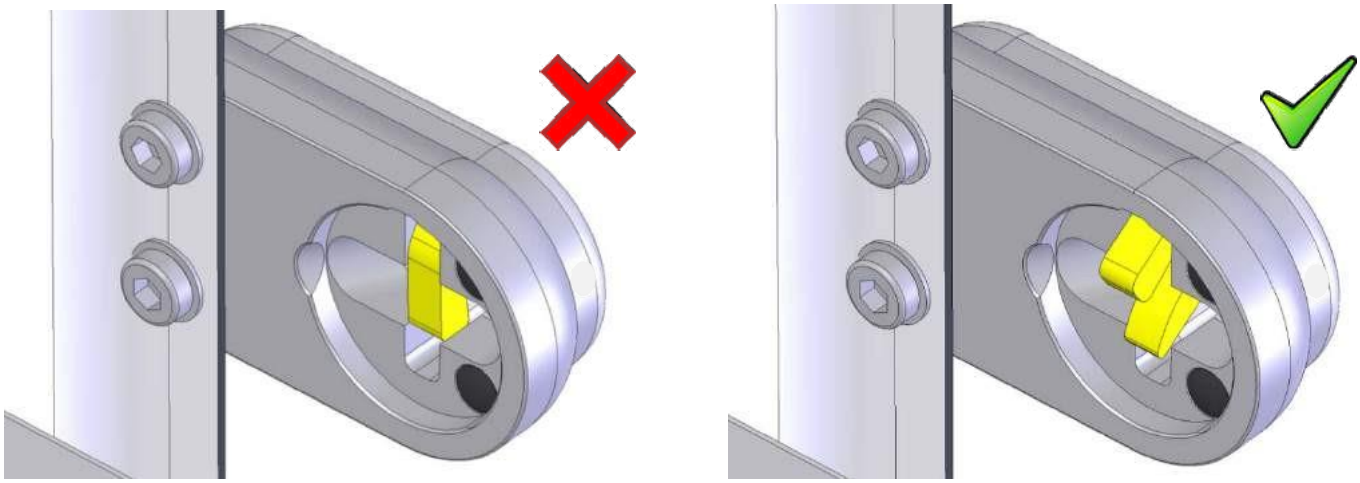

Fig.19

On models for which the vehicle's original lock must be removed, enter the cargo area through the sliding door and pull the appropriate levers to unlock the rear doors.
Finally, check that the key turns freely and that the lock opens without excessive force on the key.
Then firmly tighten the lock-body nuts and bolts.

STEP 9

Check that the lock operates correctly. Check the operation of the locking pin and locking hook by activating the internal release. Fit the plastic cover that closes the small recess. If desired, place the logo sticker on this cover.

Fig.20

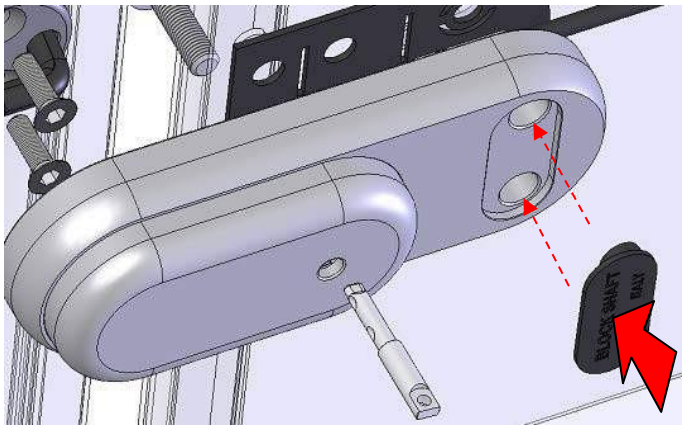

STEP 10

To install the emergency release, select a suitable position where the cable will not be obstructed by sheet metal or other components and where the emergency release knob can be fitted correctly. The system has a red plastic knob in a metal housing that can be secured with a security seal or cable tie. The red knob can be operated only after the seal has been broken, allowing a locked cargo area to be opened from the inside in an emergency.

Route the emergency release cable to a suitable location, preferably outside the inner door trim. This avoids drilling additional holes and allows the trim panels to be removed without dismantling the emergency release. Fit the supplied emergency release knob.
The system consists of an emergency release knob in a metal bracket attached to the door and secured with a security seal (fig. 21).

To operate the release from inside, break the security seal. Replace the seal after use to prevent misuse, such as leaving the cable permanently tensioned and the lock disengaged.
Grip the knob with two fingers in the designated recess and pull it.
The knob cannot be pulled from above or below because it is protected by part of the metal bracket.

If an opening were made in the outer skin of the rear door during an attempted break-in, the knob could not be pulled by hand. The emergency release cable moves backwards during operation and is completely concealed by the knob, whose specially designed internal seat is inaccessible from outside.

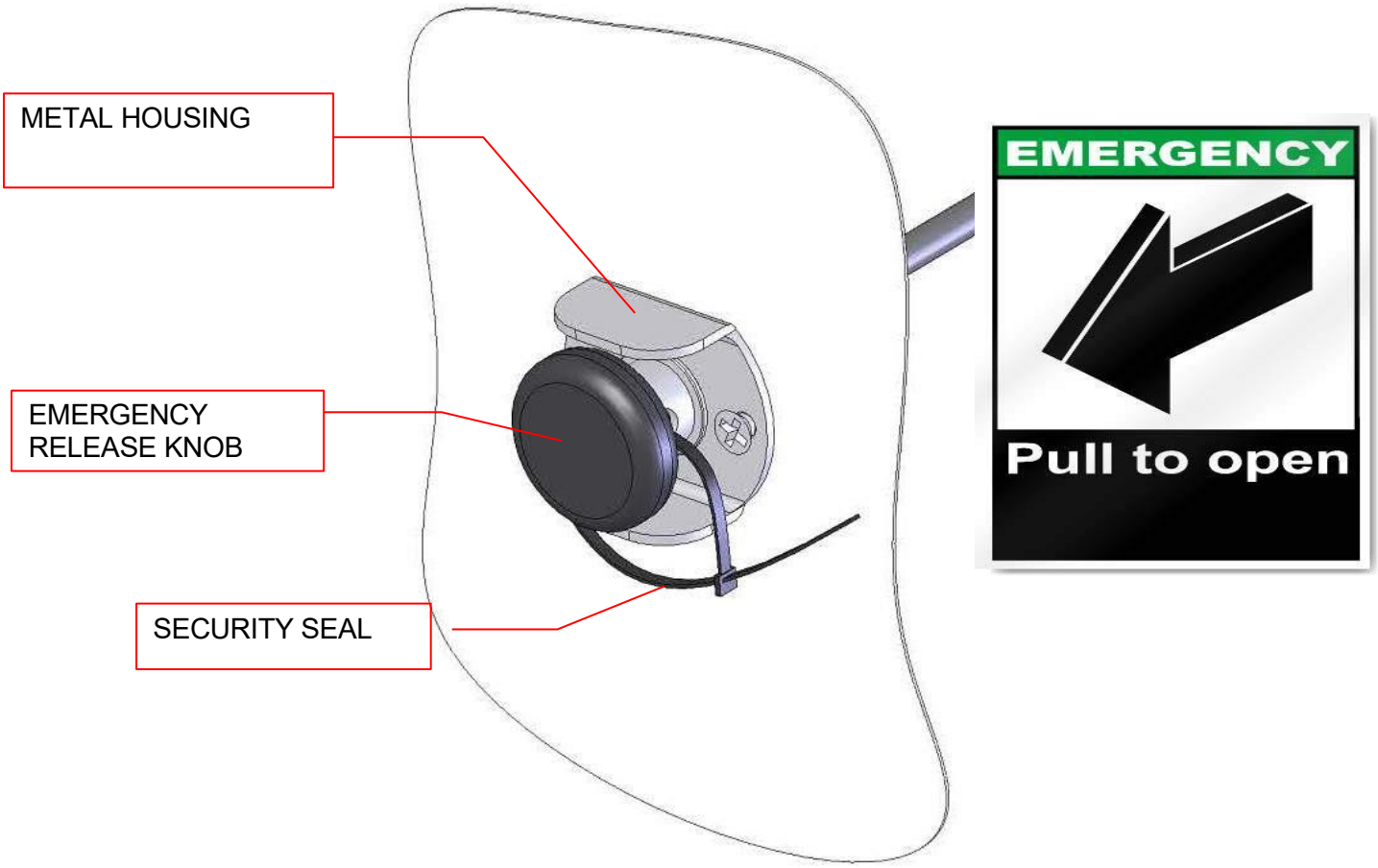

Fig.21

Emergency release operating sequence

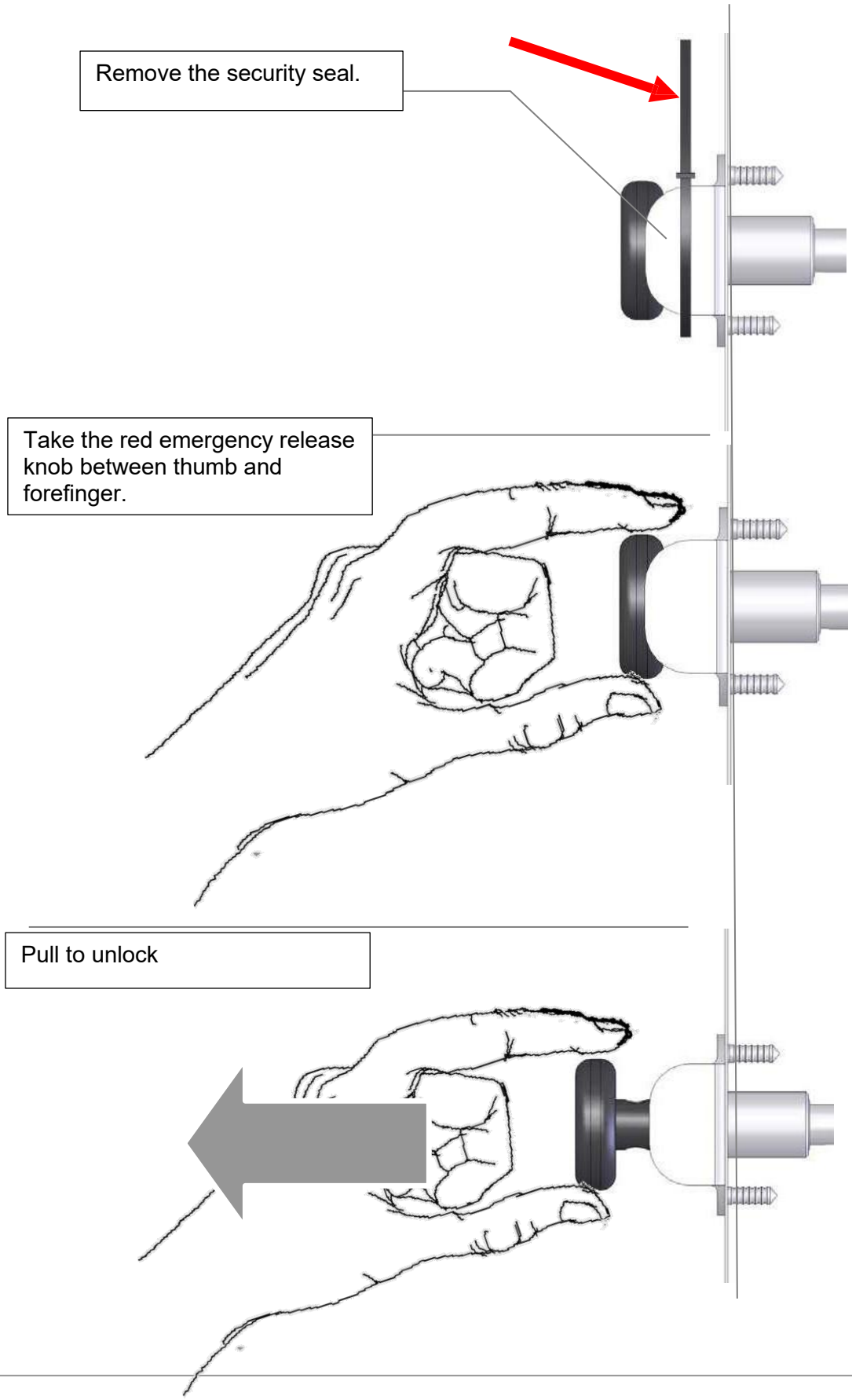

For installation, open the door and unlock the lock, holding the key fully turned (fig. 22). During unlocking, the cable travels the same distance as the locking pin (approximately 1 cm), and its spherical end must also be able to slide freely.

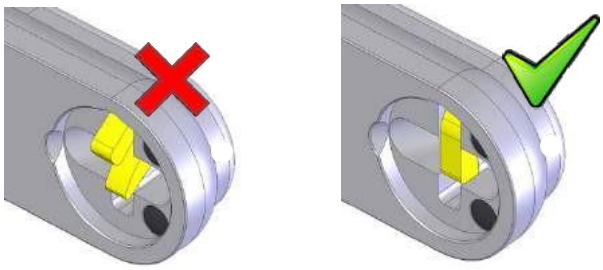

fig. 22

INSTALLING THE EMERGENCY RELEASE

Step 1: Drill the door (and/or panel). Insert the cable into the metal bracket and screw the adjustment fitting onto it.

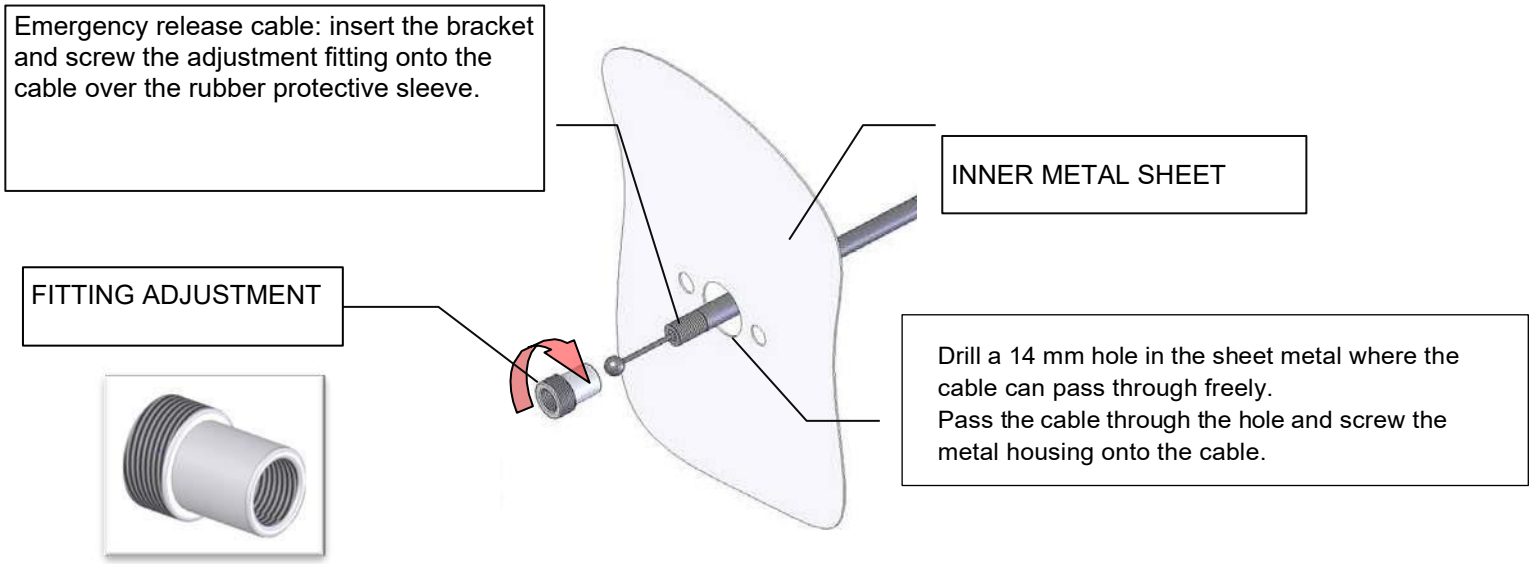

Step 2: Fit the adjustment fitting and screw it onto the tube.

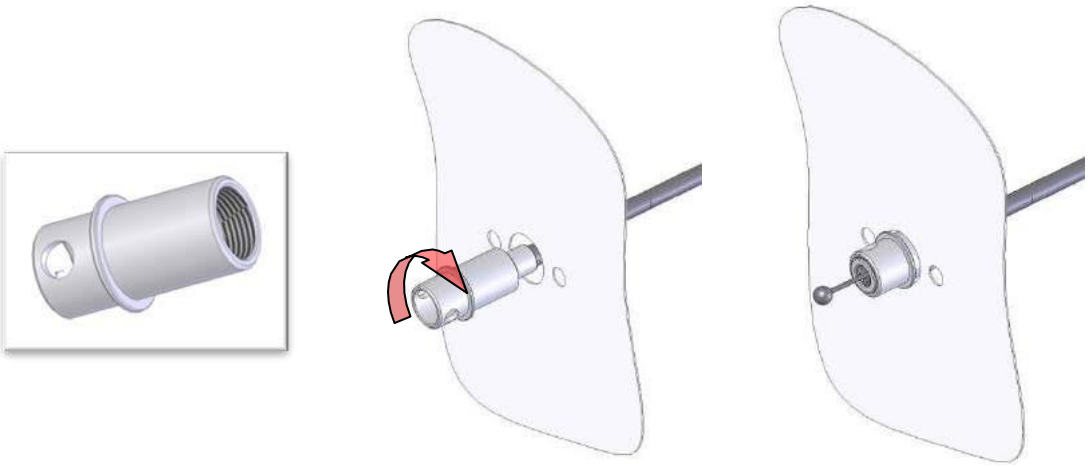

Fig. 24

Step 3: Slide the bracket over the adjustment fitting.

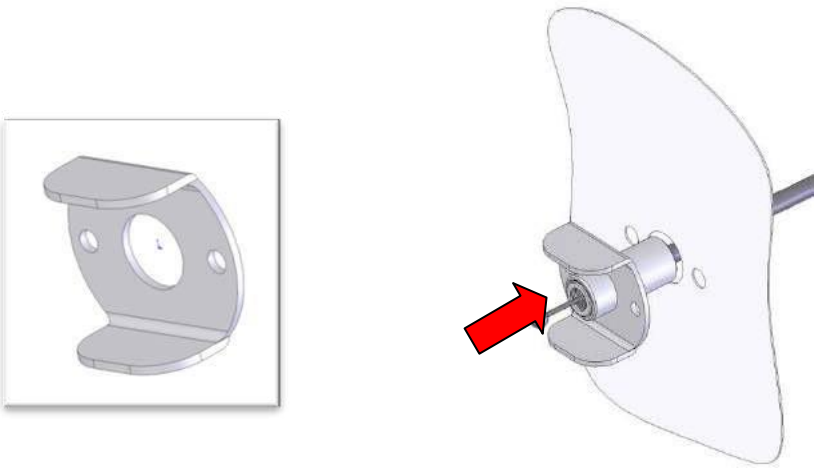

(fig.25)

Step 4: Fit the red knob and place the steel ball in its seat inside the knob.

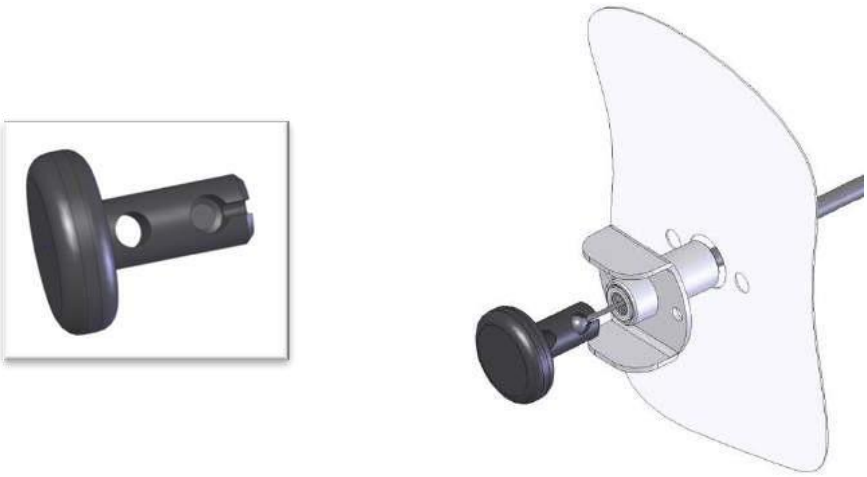

(Figure 26)

Step 5: Turn the perforated tube in the opposite direction so that the adjustment fitting rises until there is approximately 1 mm of clearance between the knob and the tube. Take care not to unscrew the adjustment fitting.

(fig.27)

Step 6: Secure the U-shaped bent plate to the rear door or panel with the self-tapping screws (fig. 28). Check that the through-hole in the knob and the hole in the tube are aligned horizontally so that the security seal can pass through them.

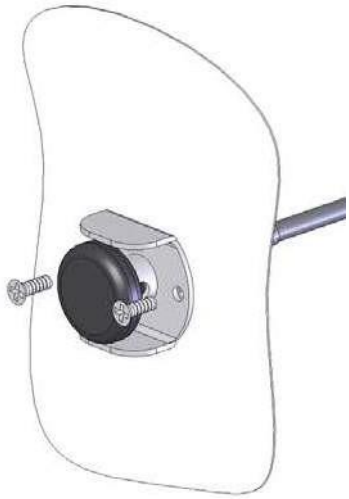

(fig. 28)

Step 7: With the lock closed and the knob aligned, fit the security seal (fig. 29). The cable is now concealed and protected against tampering.

(fig. 29)

SLIDING DOOR

Follow the same steps as with the rear door. The lock is normally placed under the horizontal guide rail of the sliding door. Check that the strike plate does not interfere with the door when it slides open (fig. 30).

Also check that the emergency release knob does not interfere with the door when opening.
Position the drilling template with its longitudinal axis parallel to the door guide and its vertical axis aligned with the edge of the door. If this position causes interference, move the template a few millimeters to the left or right
of the vertical axis.

Fig.30

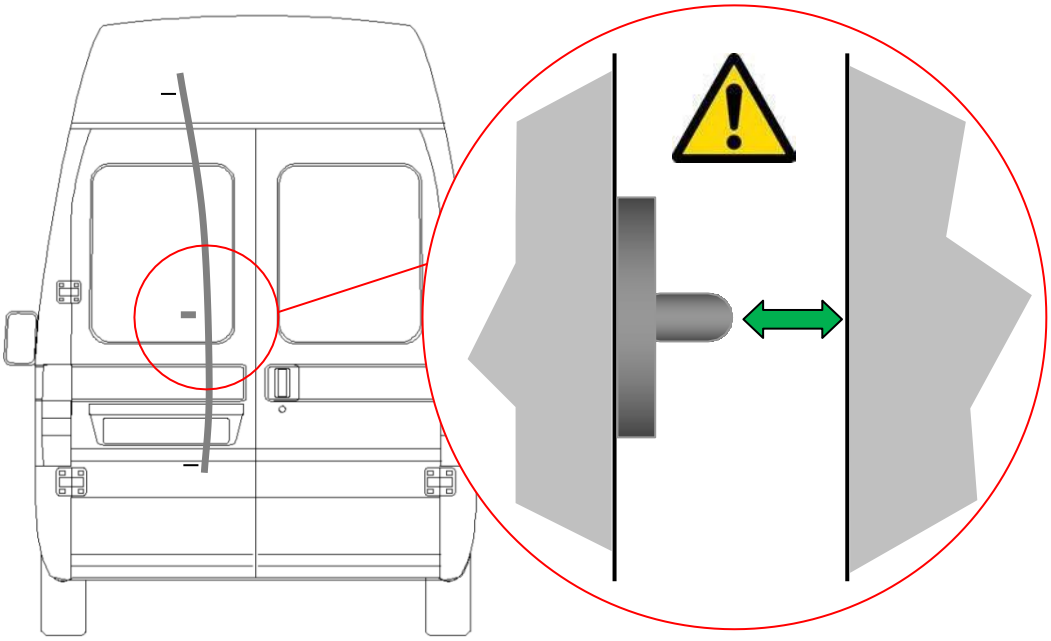

Sliding doors use different opening mechanisms. A door may move out perpendicular to the vehicle and then slide backwards, or it may first swing out at an angle and then slide backwards in a straight line. In the second case, particularly on vehicles with a large opening angle, the strike plate may need to be moved 1–2 mm in the door's sliding direction, away from the position indicated by the drilling template (fig. 31). If necessary, elongate the strike-plate holes into slots.

.

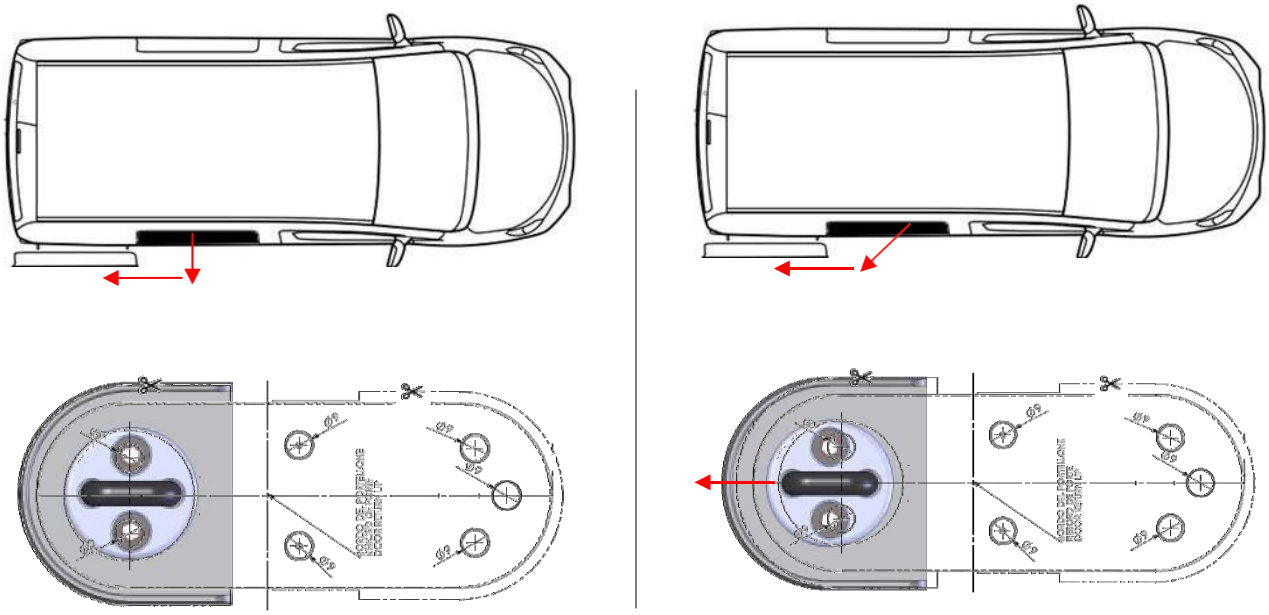

1. **Drill the holes to the dimensions specified in the installation instructions.**

2. **Always check the vertical and horizontal alignment between the strike plate and the lock body.**

3. **Use the emergency release cable to check that the locking pin operating the locking hook can slide freely.**

4. **Never leave the keys of the lock in the cargo space during and after installation.**

5. **Every six months, lubricate the lock cylinder with a water-repellent, corrosion-inhibiting, lubricating and cleaning spray such as WD-40. It must not contain additives that attract dust or dirt. Do not use a corrosive releasing spray.**

6. **Lubricate the strike plate and locking hook.**

7. **Do not spray water directly on the lock cylinder when washing the vehicle.**

8. **To avoid unnecessary force during operation, unlock the lock before operating the door handle.**

MAINTENANCE

- Check that the security components are correctly fitted and inspect them for wear. Retighten the mounting bolts and replace defective components when necessary.
- Check the operation of the lock with the key at regular intervals, at least once every three months.
- At least once a year—or more often depending on use—lubricate all moving parts and sliding surfaces with petroleum jelly and check their operation.
- Every six months—or more often depending on use—lubricate the lock cylinder with a non-corrosive, water-repellent, corrosion-inhibiting, lubricating, cleaning and degreasing spray intended for locks, such as WD-40. It must not contain additives that attract dust or dirt.
- Use only neutral, abrasive-free cleaning products and cleaning agents to avoid damaging the corrosion protection of the components.

DUPLICATING KEYS

The customer should sign the ownership card immediately after purchase and keep it in a safe place. The seller may supply duplicate keys only to customers who present the card. If the reverse of the card has not been signed when additional keys are requested, duplicates cannot be produced.

- When the holder submits a signed card, the seller must verify and validate the signature on the back of the card by comparing it to the signature on an identity document.
- If the customer ordering duplicates is not the one who signed the back of the card, an authorisation must be submitted requesting duplicates, with the same signature as on the back of the card and expressly stating the name of the person applying for the duplicates. This authorisation must be kept in the seller's archive. The seller must validate the signature on the authorisation using the signature on the card. The seller must also validate the identity of the person applying for the duplicates by requesting an identity document showing the data contained in the declaration.
- The customer must ensure that the card is returned to them.
- If the duplicate keys are not made by the dealer, the dealer must supply them within a reasonable period.

WARRANTY CONDITIONS

Block Shaft Srl subjects all its products to rigorous quality testing. If the Gatelock® Medium malfunctions despite these checks, contact us immediately.

DURATION AND COVERAGE

Under the conditions stated below, Block Shaft Srl Unip. guarantees the correct operation of the GATELOCK MEDIUM® external locking solution for commercial vehicles and warrants that the product is free from manufacturing defects.

If the product becomes defective during the warranty period, Netoma Srl will, at its discretion, repair or replace the product or the affected component.
Defective components are repaired or replaced ex works. Shipping and transport costs are therefore borne by the customer, as are the costs of any inspections requested from authorised Netoma Srl dealers and/or technicians.
Any delay in returning the vehicle to service does not entitle the customer to compensation or extend the warranty period.
Warranty claims will be considered only if the defect is reported to Block Shaft Srl within eight days of its discovery.
This is the sole warranty provided by Netoma Srl and excludes all other warranties.
For components not manufactured by Netoma Srl, only third party guarantees apply.

WHAT IS COVERED
Block Shaft Srl warrants that all GATELOCK MEDIUM® anti-theft components manufactured and assembled at the factory are free from manufacturing and material defects when used correctly.
The warranty is valid for 24 (twenty-four) months from the purchase date shown on the receipt or invoice.

WHAT IS NOT COVERED

The warranty does not cover:

• Interventions for which it is impossible to determine the date of purchase of the product.

• Any defect resulting from damage caused by improper use in violation of technical instructions, accident, theft, attempted theft or fire.

• The warranty covers technical remedies only; financial compensation for damage, regardless of cause, is excluded. This includes, without limitation, losses caused by the vehicle being out of service, incidental or consequential damage, temporary or permanent loss of vehicle use, inconvenience and commercial losses.

• Periodic checks, maintenance, repairs or replacement parts due to normal wear and tear.

• Block Shaft Srl accepts no liability for personal injury or property damage resulting from improper use of the product or from malfunctions.

LOSS OF WARRANTY

The warranty becomes void:

• If the device is damaged due to incorrect installation

• Where the product has been used for purposes and uses other than those for which it is intended and for which it has been designed and constructed

• If the deficiencies reported are due to accidents and negligence

• If the product has been modified or repaired by unauthorised persons

WHAT THE CUSTOMER MUST DO

Report any malfunction, deficiency or defect within the periods stated above to the dealer from whom the device was purchased, or contact Netoma Srl directly.

In order to use the warranty, the customer must: use the device correctly and retain the purchase documents (invoice or receipt and this document), which are required to obtain warranty repairs from a service center authorised by Netoma Srl.

The courts of Bari, ITALY, have exclusive jurisdiction over disputes concerning the interpretation or performance of this warranty.